E.C.I.NETWORKS

TECHNICAL DATASHEET

25G SFP28 BiDi — 40 km

E.C.I. NETWORKS INC. (ECIN) | EN-series |
40 km single-fiber bidirectional optical transceivers

EN-SFP28 | 25G BiDi | 40 km



EN-SFP28-BXU40 / BXD40 · BXIU40 / BXID40
Representative product images · 1270 / 1310 nm · simplex LC · up to 40 km

AT A GLANCE

DATA RATE
25.78 Gb/s
24.33–25.78 Gb/s · CDR bypass

REACH
40 km
One single-mode fiber · simplex LC

WAVELENGTH
1270 / 1310 nm
U/D pair · DML laser · APD receiver

POWER
< 1.5 W
Single 3.3 V supply

TEMPERATURE
0 to +70 °C
Industrial (BXIU/BXID): −40 to +85 °C

MONITORING
SFF-8472 DDM
2-wire interface

©2026 E.C.I. Networks Inc. All rights reserved.

PRODUCT OVERVIEW

Product overview

The **EN-SFP28-BXU40** and **EN-SFP28-BXD40** are 25G SFP28 bidirectional (BiDi) transceivers that carry both directions of a link over one single-mode fiber, up to 40 km. They work as a pair: the U module transmits at 1270 nm and receives at 1310 nm, and the D module does the reverse. A DML laser and high-sensitivity APD receiver, with internal CDR on transmit and receive, support 25G Ethernet and CPRI option 10/eCPRI. The industrial BXIU40 and BXID40 extend the case temperature range to −40 to +85 °C.

Both are part of ECIN's 25G SFP28 optical transceiver series (SR, eSR, LR, ER, ZR, BiDi, CWDM, DWDM, LWDM and MWDM), used in data centers, 5G networks, 25G Ethernet and Fibre Channel environments.

Key features

- 24.33 to 25.78 Gb/s; internal Tx/Rx CDR
- Rate adaptation: CDR bypass through RS0/RS1
- Up to 40 km over one single-mode fiber
- 1270 nm (U) / 1310 nm (D) DML laser; APD receiver
- Hot-pluggable SFP28 footprint; simplex LC connector
- Digital diagnostic monitoring over the 2-wire interface
- AC-coupled differential CML data interfaces
- Power dissipation < 1.5 W; single 3.3 V supply
- Case temperature: 0 to +70 °C (BXU/BXD), −40 to +85 °C (BXIU/BXID)

Applications

- 25G Ethernet over a single fiber
- CPRI option 10 and eCPRI fronthaul
- Metro, access and data center interconnect up to 40 km

Standards

- SFP28 MSA; SFF-8431 and SFF-8432
- SFF-8472 digital diagnostics
- RoHS compliant
- Class 1 laser safety

TYPICAL APPLICATIONS

Typical applications

BiDi optics halve the fiber count of a 25G link over distances up to 40 km, for example between central offices, hubs and remote sites. Always pair a U module with a D module of the same reach. On short links or in loopback testing, add an optical attenuator so the received power stays below the −5 dBm (OMA) overload level.

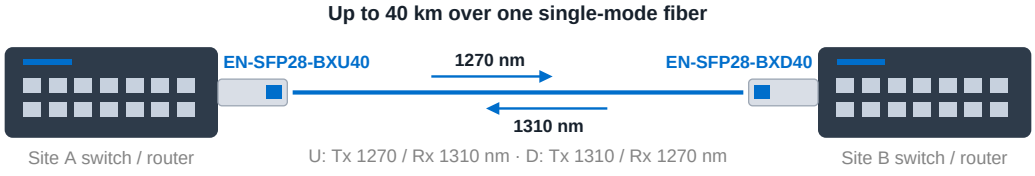

BiDi link: a U module at one end and a D module at the other, over one fiber

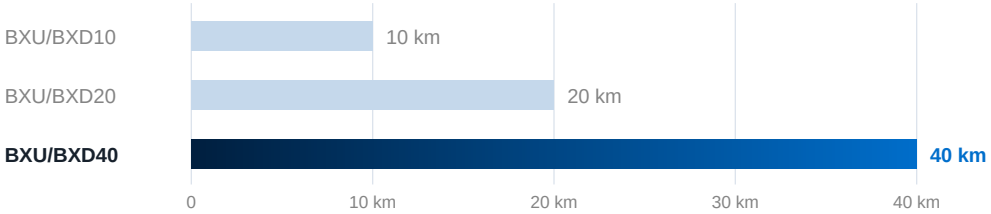

ECIN 25G SFP28 BiDi reach: 10, 20 and 40 km

©2026 E.C.I. Networks Inc. All rights reserved.

ORDERING

Ordering information

Install U and D modules as a pair. The -xx suffix identifies the host-vendor (OEM) compatibility coding.

ECIN PART NUMBER	DESCRIPTION	TEMPERATURE GRADE
EN-SFP28-BXU40-xx	25G BiDi SFP28, Tx 1270 / Rx 1310 nm, 40 km	Commercial, 0 to +70 °C
EN-SFP28-BXD40-xx	25G BiDi SFP28, Tx 1310 / Rx 1270 nm, 40 km	Commercial, 0 to +70 °C
EN-SFP28-BXIU40-xx	25G BiDi SFP28, Tx 1270 / Rx 1310 nm, 40 km	Industrial, −40 to +85 °C
EN-SFP28-BXID40-xx	25G BiDi SFP28, Tx 1310 / Rx 1270 nm, 40 km	Industrial, −40 to +85 °C

Part-number key: U = Tx 1270 nm · D = Tx 1310 nm · I = industrial temperature grade · -xx = OEM compatibility code

Notice. E.C.I. Networks reserves the right to make changes to or discontinue any optical link product or service identified in this publication, without notice, to improve design or performance. Applications described herein are for illustrative purposes only.

SPECIFICATIONS

Technical specifications

Recommended operating conditions

PARAMETER	SYMBOL	MIN.	TYP.	MAX.	UNIT	NOTES
Case operating temperature, commercial	T_C	0	–	70	°C	BXU40 / BXD40
Case operating temperature, industrial	T_C	−40	–	85	°C	BXIU40 / BXID40
Supply voltage	V_{CC}	3.14	3.3	3.46	V	
Power dissipation	P_D	–	–	1.5	W	
Bit rate	BR	24.33	25.78	–	Gb/s	

Optical characteristics

PARAMETER	SYMBOL	MIN.	TYP.	MAX.	UNIT	NOTES
TRANSMITTER						
Center wavelength, U modules	λ_C	1260	1270	1280	nm	BXU40 / BXIU40
Center wavelength, D modules	λ_C	1300	1310	1320	nm	BXD40 / BXID40
Average launch power	P_{AVG}	0	–	+6	dBm	
Spectral width (−20 dB)	$\Delta\lambda$	–	–	1	nm	
Extinction ratio	ER	3.5	–	–	dB	
Side-mode suppression ratio	SMSR	30	–	–	dB	
Average launch power, TX off	P_{OFF}	–	–	−30	dBm	
RECEIVER						
Center wavelength, U modules	λ_C	1300	1310	1320	nm	BXU40 / BXIU40
Center wavelength, D modules	λ_C	1260	1270	1280	nm	BXD40 / BXID40
Receiver sensitivity (OMA)	SEN	–	–	−19	dBm	BER ≤ 5×10^{-5}
Receiver overload (OMA)	P_{MAX}	−5	–	–	dBm	
Receiver reflectance	–	–	–	−12	dB	
LOS assert threshold	LOS_A	−35	–	–	dBm	
LOS de-assert threshold	LOS_D	–	–	−21	dBm	
LOS hysteresis	LOS_H	0.5	–	–	dB	

©2026 E.C.I. Networks Inc. All rights reserved.

MECHANICAL

Mechanical outline

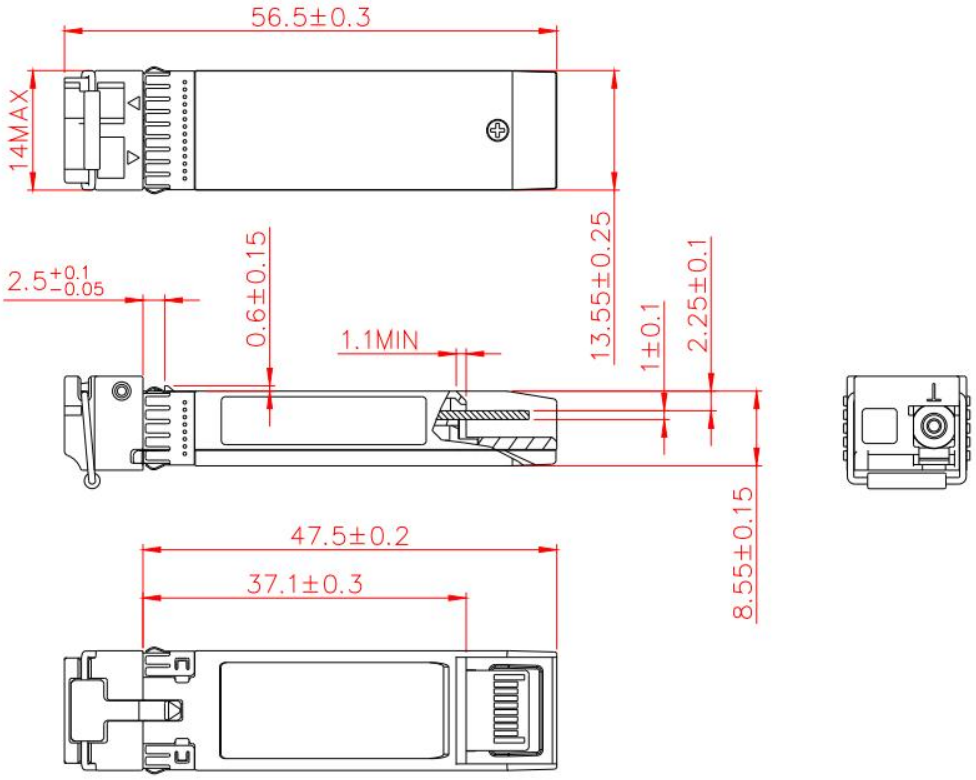

Module outline; dimensions in mm.

COMPATIBILITY

Tested and proven

- Proven compatibility and interoperability with Cisco, Juniper, Alcatel-Lucent, ADVA, Brocade, Ciena, Huawei, PacketLight, Transmode, Net Insight and ToyoTech, among others.
- Tested with test and visibility equipment from Ixia, Gigamon, VSS, Spirent, JDSU, Xena and EXFO, among others.
- OEM-coded versions (-xx) for Arista, Ciena, Cisco, F5, Fortinet, Gigamon, Huawei, Juniper (EX, MX, PTX, PTX 5K and QFX) and Nokia hosts; industrial versions are also available Nokia-coded (-NA).

LET'S CONNECT

Contact Us

For qualification, availability and additional information, contact E.C.I. NETWORKS INC.

WEBSITE	EMAIL	PHONE
www.ecin.ca	sales@ecin.ca	1-800-967-1672

©2026 E.C.I. Networks Inc. All rights reserved.