TECHNICAL DATASHEET

25G SFP28 eSR — 400 m

E.C.I. NETWORKS INC. (ECIN) | EN-series |
850 nm extended-reach multimode duplex optical transceivers

EN-SFP28 | 25G eSR | 400 m OM4



EN-SFP28-eSR-xx · EN-SFP28-eSRi-xx
850 nm · duplex LC · 300 m OM3 / 400 m OM4

AT A GLANCE

DATA RATE
25.78 Gb/s
Internal Tx/Rx CDR · rate adaptation

REACH
400 m
OM4 multimode · 300 m on OM3

WAVELENGTH
850 nm
VCSEL laser · PIN receiver

POWER
1 W max
Single 3.3 V supply

TEMPERATURE
0 to +70 °C
Industrial (eSRi): −40 to +85 °C

MONITORING
SFF-8472 DDM
2-wire interface

©2026 E.C.I. Networks Inc. All rights reserved.

PRODUCT OVERVIEW

Product overview

The **EN-SFP28-eSR** and **EN-SFP28-eSRi** are 25G SFP28 extended-reach multimode transceivers for links of up to 400 m over OM4 or 300 m over OM3 (50/125 µm) fiber, about four times the reach of standard 25GBASE-SR optics. An 850 nm VCSEL transmitter and PIN receiver, with internal CDR on transmit and receive, carry 25.78 Gb/s serial data with low jitter. The eSRi variant extends the case temperature range to −40 to +85 °C.

Both extend ECIN's 25G SFP28 optical transceiver series (SR, LR, ER, BiDi, CWDM, DWDM, LWDM and MWDM) to multimode runs beyond standard SR reach, in data centers, high-performance computing and storage networks.

Key features

- 25.78 Gb/s serial interface with rate adaptation
- Internal Tx/Rx CDR for low jitter
- Up to 400 m over OM4 and 300 m over OM3 multimode fiber
- 850 nm VCSEL laser and GaAs PIN receiver
- Hot-pluggable SFP28 footprint; duplex LC connector
- Digital diagnostic monitoring (DDM/DOM) over the 2-wire interface
- AC-coupled differential CML data interfaces
- Power dissipation 1 W max; single 3.3 V supply
- Case temperature: 0 to +70 °C (eSR), −40 to +85 °C (eSRi)

Applications

- Data center inter-rack links beyond SR reach
- High-speed servers and HPC clusters
- SAN, routers and load balancers

Standards

- SFP28 MSA; SFF-8431 and SFF-8432
- SFF-8472 digital diagnostics
- Class 1 laser safety

TYPICAL APPLICATIONS

Typical applications

The eSR extends 25G multimode links beyond the 70 m (OM3) and 100 m (OM4) limits of standard 25GBASE-SR, so longer inter-rack runs can stay on existing multimode cabling instead of moving to single-mode optics.

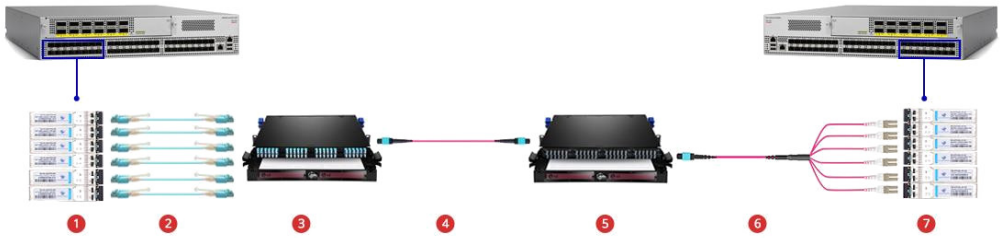

Inter-rack 25G eSR connectivity over structured multimode cabling

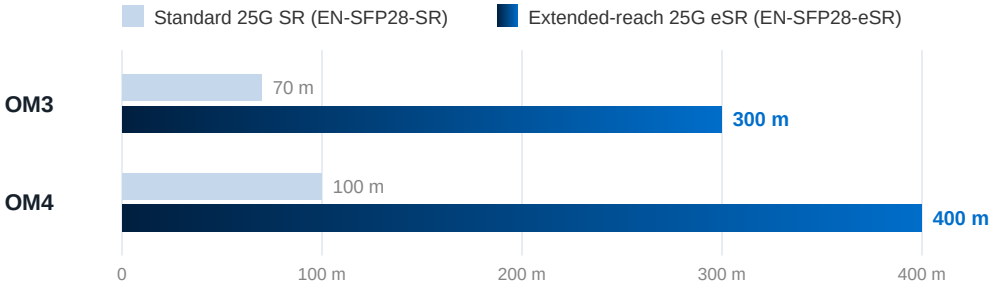

Maximum reach by fiber type: standard 25G SR versus 25G eSR

©2026 E.C.I. Networks Inc. All rights reserved.

ORDERING

Ordering information

Both variants share the same optical specification. The -xx suffix identifies the OEM compatibility (host vendor) coding.

ECIN PART NUMBER	DESCRIPTION	TEMPERATURE GRADE
EN-SFP28-eSR-xx	25 Gb/s 850 nm extended-reach multimode SFP28, 300 m OM3 / 400 m OM4, duplex LC	Commercial, 0 to +70 °C
EN-SFP28-eSRi-xx	25 Gb/s 850 nm extended-reach multimode SFP28, 300 m OM3 / 400 m OM4, duplex LC	Industrial, −40 to +85 °C

Part-number key: i = industrial temperature grade · -xx = OEM compatibility code

Notice. E.C.I. Networks reserves the right to make changes to or discontinue any optical link product or service identified in this publication, without notice, to improve design or performance. Applications described herein are for illustrative purposes only.

SPECIFICATIONS

Technical specifications

Recommended operating conditions

PARAMETER	SYMBOL	MIN.	TYP.	MAX.	UNIT	NOTES
Case operating temperature, commercial	T_C	0	–	70	°C	EN-SFP28-eSR
Case operating temperature, industrial	T_C	−40	–	85	°C	EN-SFP28-eSRi
Supply voltage	V_{CC}	3.15	3.3	3.45	V	
Power dissipation	P_D	–	–	1	W	$I_{CC} \le 300$ mA
Bit rate	BR	–	25.78	–	Gb/s	

Optical characteristics

PARAMETER	SYMBOL	MIN.	TYP.	MAX.	UNIT	NOTES
TRANSMITTER						
Center wavelength	λ_C	840	–	860	nm	
RMS spectral width	λ_{rms}	–	–	0.6	nm	
Average launch power	P_{AVG}	−5	–	+2.4	dBm	
Optical modulation amplitude	OMA	−5	–	+3	dBm	
Average launch power, TX off	P_{OFF}	–	–	−30	dBm	
Extinction ratio	ER	3.0	–	–	dB	
Optical return loss tolerance	–	–	–	12	dB	
RECEIVER						
Center wavelength	λ_C	840	850	860	nm	
Receiver sensitivity	SEN	–	–	−10.3	dBm	BER < 5×10^{-5}
Overload input optical power	P_{MAX}	+2.4	–	–	dBm	
Damage threshold	–	+3.4	–	–	dBm	
Receiver reflectance	–	–	–	−12	dB	
LOS assert threshold	LOS_A	−30	–	–	dBm	
LOS de-assert threshold	LOS_D	–	–	−13	dBm	
LOS hysteresis	LOS_H	0.5	–	–	dB	

©2026 E.C.I. Networks Inc. All rights reserved.

MECHANICAL

Mechanical outline

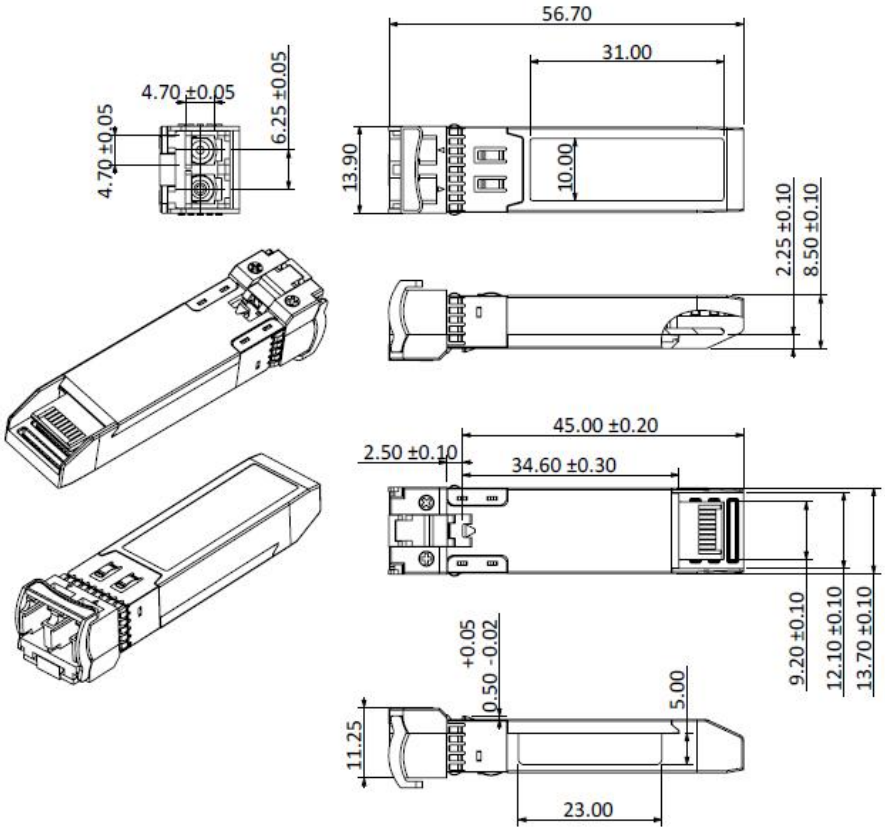

Module outline; dimensions in mm.

COMPATIBILITY

Tested and proven

- Proven compatibility and interoperability with Cisco, Juniper, Alcatel-Lucent, ADVA, Brocade, Ciena, Huawei, PacketLight, Transmode, Net Insight and ToyoTech, among others.
- Tested with test and visibility equipment from Ixia, Gigamon, VSS, Spirent, JDSU, Xena and EXFO, among others.
- OEM-coded versions (-xx) for Arista, Ciena, Cisco, F5, Fortinet, Gigamon, Huawei, Intel, Juniper (EX, MX, PTX, PTX 5K and QFX) and Nokia hosts.

LET'S CONNECT

Contact Us

For qualification, availability and additional information, contact E.C.I. NETWORKS INC.

WEBSITE
www.ecin.ca

EMAIL
sales@ecin.ca

PHONE
1-800-967-1672

©2026 E.C.I. Networks Inc. All rights reserved.